715 XS VALVE WITH ACTREG PNEUMATIC ACTUATOR

FEATURES

The 715XS+ADA 2-way stainless steel ball valve is designed for the automatic shut-off of pipes with non-loaded industrial fluids. It is a full-bore valve with an antistatic device. It is EC-SIL and ATEX-approved. The ISO 5211 mounting pad allows the actuator to be directly assembled. The pneumatic motorisation is available in double and spring-return with numerous options.

AVAILABLE MODELS

IR 3 / IR 1 — SIL 3 — 3.1 Cert. — Ex — CE 0035

On request

1.4408 stainless steel body.
1/2" to 3'' diameters.
G thread connections.
Double and spring-return ADA-ASR actuator.

LIMITS OF USE

Fluid pressure : PS	63 bar (20°C)
Fluid temperature : WT°	- 10°C / +180°C
Ambiant temperature	- 30°C / + 100°C
Motor compressed air	mini 6 bar / maxi 10 bar

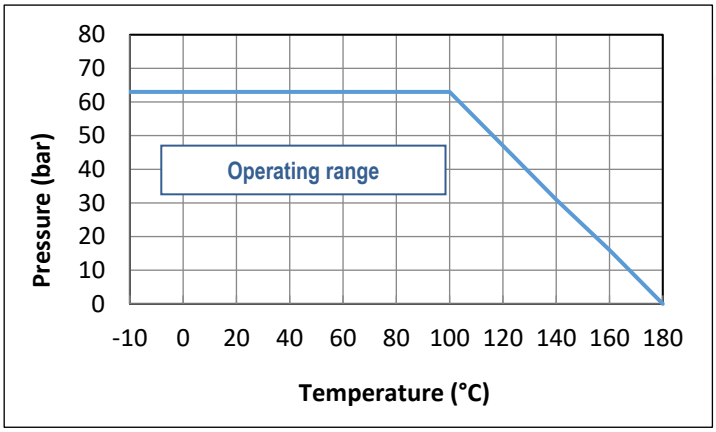

DIRECTIVES AND MANUFACTURING STANDARDS

OBJET	Standard	ON	OBJET	Standard
Pressure Equipment Directive 2014/68/EC	1/2" to 1": not subject		Final test	NKS 12266
	1''1/4 to 3'': category III	TÜV 0035	Material certificate	NKS 10204
Size	EN 12516-1		Motorisation connection	ISO 5211:
Steel grades	EN 1503-1		Actuator pilot connection	NAMUR
ATEX Directive	II 2G/D Tx zones 1,2,21 and 22	SIRA 0518	Switch box connection	VDI/VDE 3845
	EN 13463-1 and 5		SIL 3 level	NKS 61508

Information given as an indication only, and subject to possible modifications

715 XS VALVE WITH ACTREG PNEUMATIC ACTUATOR

CONSTRUCTION

No.	Name	Material	No.	Name	Material
1	Body	1.4408 SS	11	Lever	304 SS
2	Lateral end	1.4408 SS	12	Nut	304 SS
4	Seats	PTFE + +15% GF	13	Stop	304 SS
5	Stem	316 SS	14	Liner	PVC
6	Body gasket	PTFE	15	O-ring	FKM
7	Washer	PTFE	16	Slide	304 SS
8	Cable gland gasket	PTFE	17	Antistatic device	316 SS
9	Washer	304 SS	18	Spring	316 SS
10	Bellevile spring	301 SS			

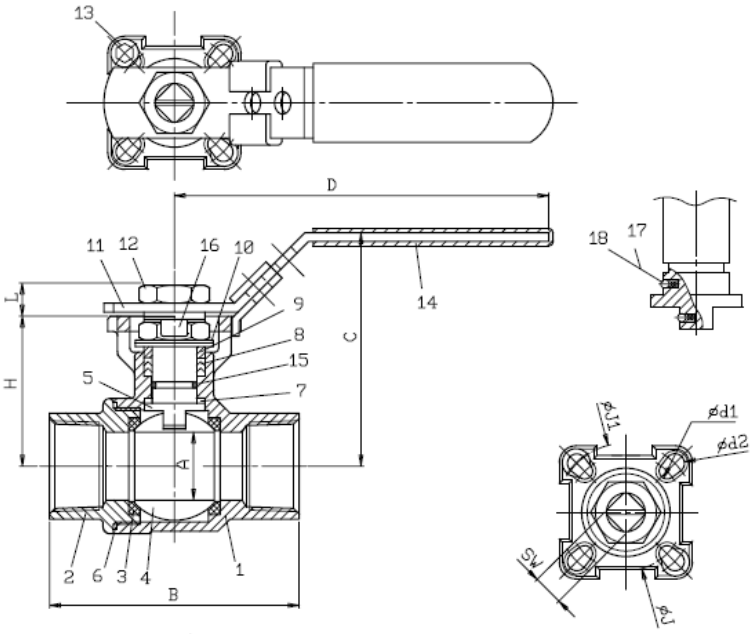

DIMENSIONS (mm)

DN	A	B	C	D	H	L	J	J1	d1	d2	SW
1/2"	15	55	70,9	110	42,3	8	42	50	6	7	9
3/4"	20	76	73,4	110	44,9	8	42	50	6	7	9
1”	24,5	83	84,1	135	54	10	42	50	6	7	11
1”1/4	32	91	89,3	165	59,2	10	50	70	7	9	11
1”1/2	38	103	109,5	165	71,3	10	50	70	7	9	11
2”	50	120	118,9	165	82,9	14,8	50	70	7	9	14
2”1/2	65	155	155	300	107	17.1	70	102	9	11	17
3”	80	182	165	335	117	17.1	70	102	9	11	17

Information given as an indication only, and subject to possible modifications

ACTREG PNEUMATIC MOTORISATION

The ACTREG motorisation proposed as standard comprises:
- rack and pinion actuator of anodised aluminium.
- a safety coefficient of 1.3 minimum compared to the nominal torque of the valve.
- air non-lubricated dry motor, minimum 6 bar pressure.
- an upstream / downstream pressure difference ΔP=10 bar max.

The actuator assembly is of the following types:
- direct mounting type.

DN	Double effect	V (liters)	Time (s)*	Spring-return	V (liters)	Time (s)*
1/2"	ADA 20	0,13	0,1	ASR 20	0,13	0,1
3/4"	ADA 20	0,13	0,1	ASR 20	0,13	0,1
1''	ADA 20	0,13	0,1	ASR 40	0,27	0,3
1''1/4	ADA 20	0,13	0,1	ASR 80	0,64	0,3
1''1/2	ADA 40	0,27	0,1	ASR 130	0,77	0,5
2''	ADA 80	0,64	0,3	ASR 200	1,20	0,6
2''1/2	ADA 80	0,64	0,3	ASR 200	1,20	0,6
3''	ADA 130	0,77	0,5	ASR 300	1,96	0,9

For any other operating conditions, please contact us.
*indicative time of the no-load actuator for opening or closing.

INSTALLATION IN AN ATEX ZONE

For 715XS+ACTREG automatic valves to be installed in ATEX 1, 2, 21 or 22 zones, this has to be specified when ordering.
Our services will check of the assembly, the installation of an earthing braid, and will issue an assembly certificate.
Our authorised technicians carry out these operations in the workshop. Please contact us.
The special assembly and maintenance instructions for motorised valves in the ATEX zones must be followed.

OPTIONS OF MOTORISATION

1	actuators dimensioned for a compressed air pressure of 3, 4 or 5 bar
2	actuator dimensioned for an upstream / downstream pressure difference ΔP greater than 10 bar
3	manual override with declutchable gear box
4	compressed air filter regulator
5	All types of piloting solenoid valves
6	all types of switch boxes
7	all types of positioner
8	Quick exhaust, flow-rate limiters - exhaust brakes

SECTORIEL S.A.
45 rue du Ruisseau
38290 SAINT QUENTIN-FALLAVIER – FRANCE
Tél : +33 4 74 94 90 70 - Fax : +33 4 74 94 13 95
www.sectoriel.com / Email : sectoriel@sectoriel.fr

ASSEMBLY AND MAINTAINANCE INSTRUCTIONS

1 - Installation

1.1 - Checks

- Check that the material of the valve body is chemically compatible with the fluid.
- Check that the pressure and service conditions are compatible with the (P, T) diagram of the valve. See § “Service limits”
- Check that the fluid is clean and free of particles. The latter could scratch the ball and damage the seats, hence causing the valve to leak. If need be, install an upstream filter.
- Check that there is no risk of thermal expansion of the fluid, which could damage the seats. In the open position, a hole at the top of the ball balances the pressures between the body cavity and the flow of the fluid. As an option, we recommend a relief hole upstream of the valve for balancing the pressures for fluids such as ammonia, LPG, chlorine, etc.
- Check that the valve is not used for flow or pressure control since it is not intended for this use and there is a risk of premature wear of the seats, in particular in the event of high pressure and/or temperature. For this special application, preferably use our ‘”V-port” 746XS version with a V-shaped hole in the ball. Please contact us.
- Check that the valve is not used on a gas which might condense at certain times during the process. In such a case, the pressure within the body cavity could become negative, which could lead to a significant deformation of the seats. Please contact us.
- Static electricity: the valve will be supplied with a ball-stem-body internal electrical continuity tester. If the service conditions require the electrical continuity of the installation, check its earthing.
- If the valve is installed in an explosive zone, you must follow the additional “IMEVMATEX” instructions.

1.2 - Storage before installation

- Follow our general “IMESTOCK” instructions for storage.

1.3 - Installation

- Before any installation, isolate the piping upstream and downstream, depressurize the piping and bring the installation to ambient temperature. Carefully clean the piping of any particle (foreign body, dust, rust, etc.) or shavings by water rinsing or air blowing.
- For valves with a size above DN50, plan to use a hoist.
- Remove the protective tips from the valve ends.
- Check the cleanliness of the internal surfaces of the valve and if need be, clean them.
- Direction of mounting: the valves do not have a preferred direction of mounting, unless a relief hole was drilled into the ball.
- Check the perfect alignment and the proper support of the pipe installation upstream and downstream of the valve. Alignment defects cause mechanical deformations which can block the valve or lead to leaks at the body gaskets.
- Check that the standards for the valve internal thread and pipe thread are the same.
- Cover the pipe threads using a sealing material (tow, PTFE tape, sealing glue, etc.) which is suitable for the fluid.
- Screw the tube into the valve end clockwise, as shown in the diagram below.
- Check the sealing of the connection using a suitable test (hydrostatic test or leak detection spray).
- Hydraulic test of the installation:
    - Valves were tested at the factory at 1.5 x WP.
    - If a hydrostatic test is carried out on the installation, do not exceed the authorised pressure.

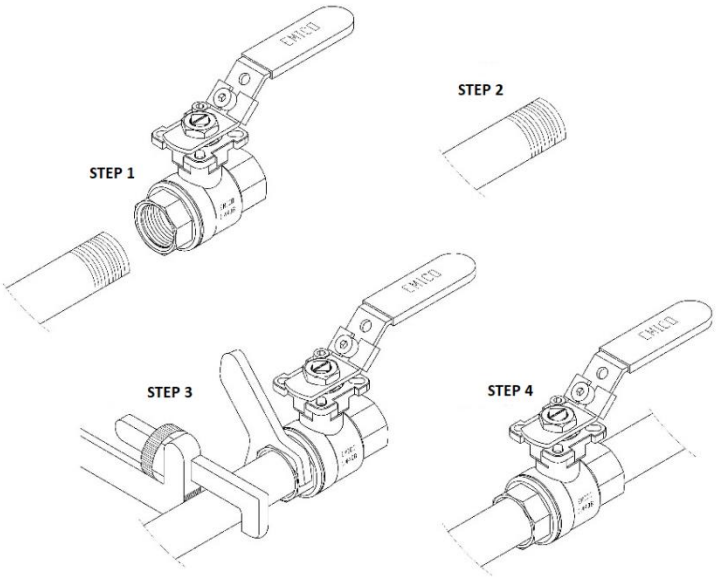

2 - Service

- If a hot fluid flows across the valve, do not touch the valve surface.
- Always operate the valve slowly and smoothly.
- Opening clockwise, closing anti-clockwise.

3 - Servicing

3.1 - Frequency of servicing

- The servicing frequency depends upon the use of the valve, of the type of fluid, of its velocity, of its frequency of operation, of the cycles of rise and fall in pressure and temperature.
- Before any intervention, isolate the upstream and downstream pipe installation using the valves provided for this purpose. Depressurize the pipe installation and bring it to ambient temperature.
- If the lever has to be removed, do that before disassembling the body.
- To remove the central body, unscrew the lateral end (item 2).
- To remove the ball from the body, turn the stem by a quarter turn.

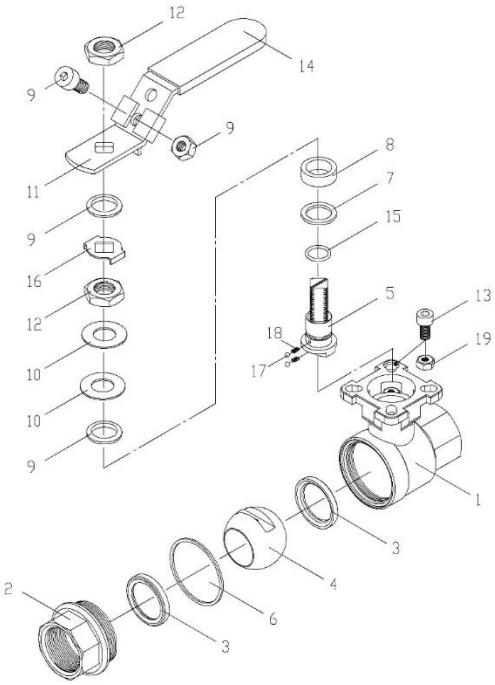

3.2 - Inspecting the state of the valve and possible repair

- Check the state of the ball (Item 4): it has to be clean and unscratched. If the cleaning or polishing is not possible, replace it (see the § on spare parts).
- Check the state of the seats (3.1 and 3.2): they must not be deformed, nor scratched, nor worn, or dirty. Otherwise, replace them with parts from the gasket kit.
- Check the state of the packing gland (7.8 and 9): no leak should be found at the stem and the rings should not be excessively worn. If need be, replace the gaskets.
- Check the state of the body gasket (6.1 and 6.2). Replace it, if need be.
- Reassemble the different parts of the valve, following the tightening torques shown in the table below.
- Check that the stem manoeuvring is smooth. Perform about ten manoeuvres.

TABLE OF THE TIGHTENING TORQUES OF THE TIE-BOLTS AND OF THE LEVER NUT

DN	Lever nut (Nm)
1/4'' – 6	4
3/8'' – 10	4
1/2'' - 15	4
3/4'' - 20	4
1'' - 25	4.5
1''1/4 - 32	4.5
1''1/2 - 40	5.5
2'' - 50	5.5
2''1/2 - 65	7
3'' - 80	7

SPARE PARTS

DN	Gasket kit	Ball	Lever
Reference mark	**6-7-8-15**	**4**	**11**
1/2'' - 15	Please contact us.	980032	982802
3/4'' - 20	Please contact us.	980033	982802
1'' - 25	Please contact us.	980034	982804
1''1/4 - 32	Please contact us.	980035	982804
1''1/2 - 40	Please contact us.	980036	982806
2'' - 50	Please contact us.	980037	982806
2''1/2 - 65	Please contact us.	Please contact us.	982808
3'' - 80	Please contact us.	Please contact us.	982808

SECTORIEL S.A.
45 rue du Ruisseau
38290 SAINT QUENTIN-FALLAVIER – FRANCE
Tél : +33 4 74 94 90 70 - Fax : +33 4 74 94 13 95
www.sectoriel.com / Email : sectoriel@sectoriel.fr

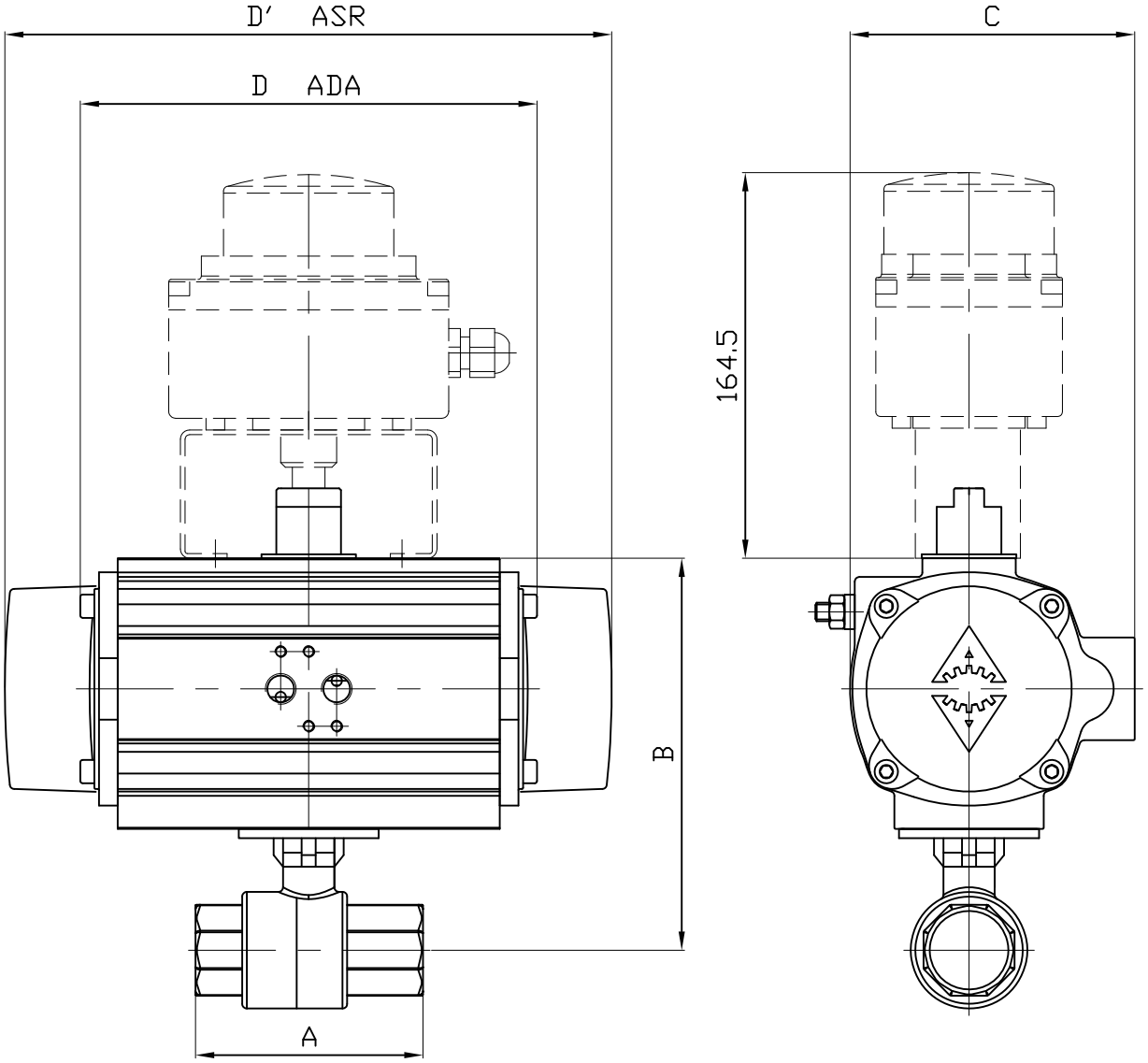

DN	1/2"		3/4"		1"		1"1/4		1"1/2		2"		2"1/2		3"	
ACTREG	ADA20	ASR20	ADA20	ASR20	ADA20	ASR40	ADA20	ASR80	ADA40	ASR130	ADA80	ASR200	ADA80	ASR200	ADA130	ASR300
A	55		71		83		91		103		120		155		182	
B	108.3		110.9		120	139	125.2	166.2	156.3	188.3	189.9	217.9	214	242	234	269
C	76		76		76	91	76	111	91	122	111	135.5	111	135.5	122	152.5
D	145	-	145	-	145	-	145	-	158	-	177	-	177	-	196	-
D'	-	163	-	163	-	195	-	217	-	258	-	299	-	299	-	348.5
KG	1.89	1.94	2	2.06	2.35	3.28	2.87	5.23	3.82	6.76	6.68	11.08	9.94	14.38	13.83	20.92

Informations données à titre indicatif et sous réserve de modifications éventuelles
data subject to alteration

Ech:/	Date :27/10/2020	Dessiné par : E.D.	Tolérances générales : +/- 0.2	Modifications	Date	REV.

ROBINET A TOURNANT SPHERIQUE 715 XS/BALL VALVE 715XS +
ACTIONNEUR ACTREG + BFC/PNEUMATIC ACTUATOR ACTREG + LIMIT SWITCH BOX

Matiére :

Poids (Kg) :

Traitement : SANS

SECTORIEL

45, Rue du Ruisseau

38297 SAINT QUENTIN FALLAVIER

Plan n° Ens 1447

ACTREG

The art of power and perfection

PNEUMATIC ACTUATORS

SECTORIEL

IR 3

ACTREG

The art of power and perfection

RACK AND PINION
Aluminium housing

TORQUES UP TO
6,500 Nm

ACTUATORS IN
14 different sizes

We are a manufacturer of rack and pinion aluminium housing actuators with torque figures up to 6,500 Nm and scotch yoke actuators for heavy duty service up to 250,000 Nm. Our products offer reliable and dependable service for ¼ turn valves.

Engineered and built to withstand most of the applications and environmental conditions, the precision in design and quality provides a long and safe operational performance in valve control.

ACTREG has invested in quality assurance, state-of-the-art machining and testing facilities in order to assist customers in safely controlling their processes.

ACTREG engineers are happy to help you with your automation demands.

SCOTCH YOKE
Heavy duty service

TORQUES UP TO
250,000 Nm

ACTUATORS IN
25 different sizes

Certificates

ACTREG, S.A. has a quality Management System certified in accordance with the requirements of ISO 9001:2008 for the design, development, manufacturing and distribution of pneumatic actuators and accesories for valves. Certified by BVQI No. ESPMDD005463.

ADA/ASR 10 up to ADA/ASR 300 are classified as category SEP in accordance with the requirements of Pressure Equipment Directive 97/23/EC. ADA/ASR 500 up to ADA/ASR 4000 are classified as Category I, Procedure module A.

All ACTREG pneumatic actuators are classified for use in potentially explosive atmospheres as Group II Category 2, suitable for zones 1, 2, 21 and 22 in accordance with Annex VIII of Directive 94/9/CE (ATEX). Technical file is deposited in LCIE, No. LCIE 05 AR 022.

ACTREG pneumatic actuators have got SIL 3 (Safety integral level 3) certificate. The ACTREG actuators meets manufacturer design process requirements of Safety integral Level (SIL) 3. This is intended to achieve sufficient integrity against systematic errors of design by the manufacturer.

perfection

MAIN FEATURES & CHARACTERISTICS

1 **BODY**
The aluminium body is inside and outside coated with hard anodizing, with extremely abrasion resistance, low surface roughness and optimal resistance.

2 **PINION**
Carbon steel shaft electroless nickel plated against external and internal corrosion. Anti-blowout design.

3 **ADJUSTMENT STROKE**
External stroke adjustment for 5 degrees regulation, placed on the opposite side of Namur connection for better manipulation when the solenoid valve is assembled.

4 **PISTONS**
Pistons are coated with special treatment for corrosion resistance. Backslash is avoided by a special tooth machining. The pistons have a 3 way guide for low friction between body and pistons. The pistons ara also provided with an integral guide machined between pistons and pinion.

5 **POSITION INDICATOR**
Multi-function indicator suitable for mechanical or inductive switches is a standard feature. Many different combinations without the need to buy external indicators.

6 **SPRINGS**
Pre-stressed springs offers more torque and different options for their positioning. This system allows us to easily fit the necessary torque to close or open the valve, offering a total safety replacement and manipulation.

7 **END CAPS**
Different end caps for double or single acting for fast and safety identification without the need to read the label. End caps are epoxy coated as standard protecting them against environment corrosion.

\+ Every single actuator is tested and provided with a unique serial number for traceability. This heat number is stamped on the body.

\+ The assembly of switch boxes, proximity switches or positioners, takes place by means of the Namur connection VDI/VDE 3845, which is a standard feature in all our models. The height of the axis to fulfil this Norm is of 30 mm, for all our products, with which it entails that with a single model of Box or positioner, we can cover all our manufacturing range.

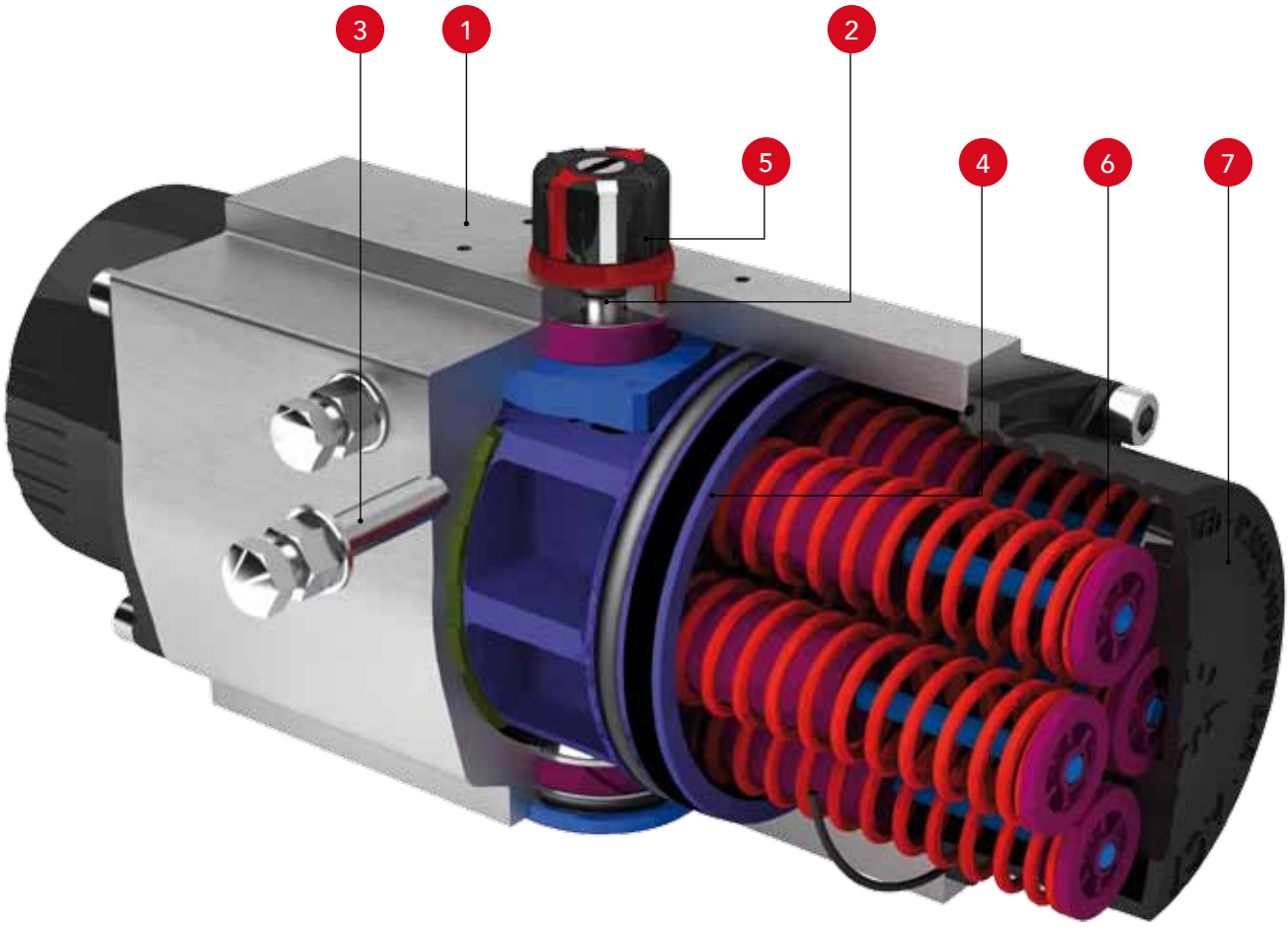

Types of Actuators
Double Acting & Spring Return

ADA
DOUBLE
ACTING
ACTUATOR

ASR
SPRING
RETURN
ACTUATOR

Rack and pinion design | Linear torque | Rotation angle 90° ± 5° | Antifriction sliding bearings | Long life without maintenance | Total safety for springs replacement | Mounting of solenoid valves acc. NAMUR Std. | Mounting of devices acc. NAMUR VDI/VDE 3845 Std. | Coupling according to ISO 5211 and DIN 3337 (Octogonal drive) | Multi-function position indicator suitable for mechanical and inductives direct switches.

Working temperature:
-30 °C to 100 °C in Standard Construction.
-15 °C to 150 °C with FKM O-rings (high temperature execution).
-40 °C to 80 °C with Silicone O-rings (low temperature execution).
-55° C to 80° C with Silicone O-rings and 316 pinion (extreme low temperature).

Maximum working pressure:
8 bar (116 psig). (Except ADA10 at 10 bar)

Bi-Directional Travel Stops

ACTREG pneumatic actuators are provided with bi-directional pinion travel stops.

Side located stops allow a full ± 5° travel adjustment between 85° and 95°. These travel stops are designed to absorb the maximum rated torque of the actuator and the maximum impact loads associated with recommended travel speed.

Adjustment of the counterclockwise and clockwise rotation limits is accomplished by unscrewing the locking nuts, turning the respective left and right stop studs to reduce or increase the travel angle and screwing the locking nuts.

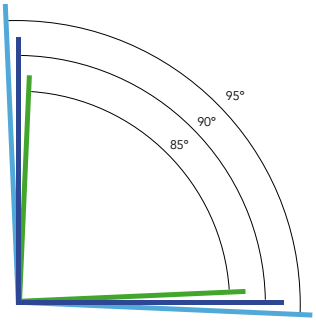

Options On Request

- Stainless steel pinion (grade 304 and 316).
- Fast acting actuators.
- Actuators with 100% travel adjustment stroke.
- Actuators fire proof (K-mass, blancket, other executions,...).

Coatings for special applications

Actreg Pneumatic actuators shall be protected against external corrosion resistant by proper material selection or surface treatment.
Actreg coatings are according to EN 15714-3 and are indicated to:

Standard execution
Anticorrosive C3 according EN-ISO 12944-2

PARTS & PROTECTION	DESCRIPTION	COATING
BODY	Hard anodized	25 - 30 µm
END CAPS	Epoxy painted	80 - 90 µm
STEM	Carbon steel + ENP	25 - 30 µm

Execution A1
Anticorrosive C5-I according to EN-ISO 12944-2

PARTS & PROTECTION	DESCRIPTION	COATING
BODY	Epoxy painted	80 - 90 µm
END CAPS	Epoxy painted	80 - 90 µm
STEM	SS 304	

Execution A2
Anticorrosive C5-M according to EN-ISO 12944-2

PARTS & PROTECTION	DESCRIPTION	COATING
BODY	Epoxy painted	80 - 90 µm
END CAPS	Epoxy painted	80 - 90 µm
STEM	SS 316	

Execution B
Anticorrosive C4 according to EN-ISO 12944-2

PARTS & PROTECTION	DESCRIPTION	COATING
BODY	Epoxy painted	80 - 90 µm
END CAPS	Epoxy painted	80 - 90 µm
STEM	Carbon steel + ENP	25 - 30 µm

Execution C
Anticorrosive C5-I according to EN-ISO 12944-2

PARTS & PROTECTION	DESCRIPTION	COATING
BODY	Hard anodized + ENP	25 - 30 µm
END CAPS	ENP	80 - 90 µm
STEM	Carbon steel + ENP	25 - 30 µm

Multi-function position indicator

Inductive switch indicating open or closed position

Mechanical switches indicating open and close

Inductive switches indicating open and closed position

Namur connection for direct mounting switch box

Inductive switches indicating open and closed position (45° detecting switches…)

Inductive switches indicating open and closed position (up/down detecting switches…)

PARTS & MATERIALS

1 Body
Aluminium Hard Anodized

2 Piston
Aluminium

3 Pinion
Nickel Plated Carbon Steel

4 End Caps
Aluminium Epoxy Coated

5 Soft Pinion Washer *
Polyamide PA 6,6

6 Slide Piston *
Polyamide PA 6,6 + 30% G.F.

7 Lug **
Nickel Plated Carbon Steel

8 Pinion Washer
Stainless Steel

10 Upper Pinion Bearing
Polyamide PA 6,6 Size 500
& greater in Reinforced Br.

12 Stop
ASTM A 105

14 Spring's Long Support
Polyamide PA 6,6

15 Spring's Short Support
Polyamide PA 6,6

16 Leveling Screw
Stainless Steel

18 Bolt
Stainless Steel

19 Spring
DIN 2076 · D-5.6

20 Position Indicator
Polypropylene

21 Cam
Polypropylene

23 Centering Ring
Nickel Plated Carbon Steel

25 Slide Guide *
Polyamide PA 6,6 + 30% G.F.

26 Lower Pinion Bearing *
Polyamide PA 6,6

41 Stop Washer Pinion **
Stainless Steel

109 O-Ring *
NBR

110 O-Ring *
NBR

SPRING RETURN ACTUATOR (ASR)

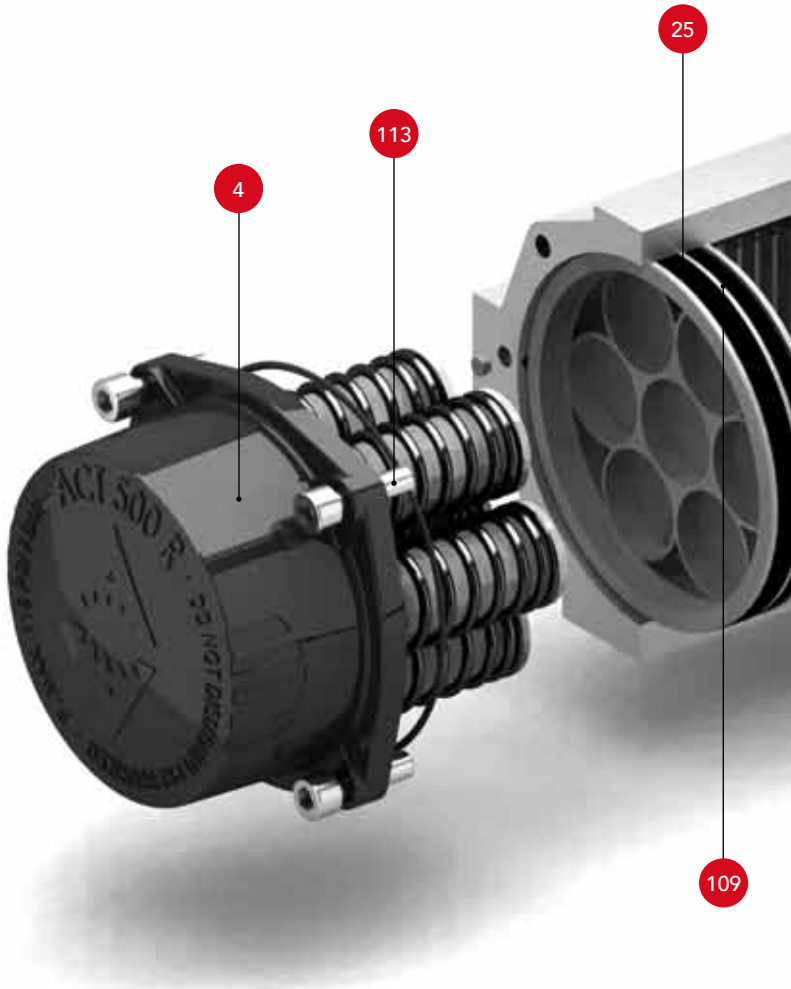

111 O-Ring *
NBR

113 Bolt
Stainless Steel

118 O-Ring *
NBR

119 O-Ring *
NBR

125 Washer
Stainless Steel

471 Slip Washer *
Stainless Steel

934 Nut
Stainless Steel

985 Nut
Stainless Steel

POSITION INDICATOR

FROM SIZE 20 TO 850

FROM SIZE 1200 TO 4000

Inserts
Stainless Steel

Position indicator & Cams
Polypropylene

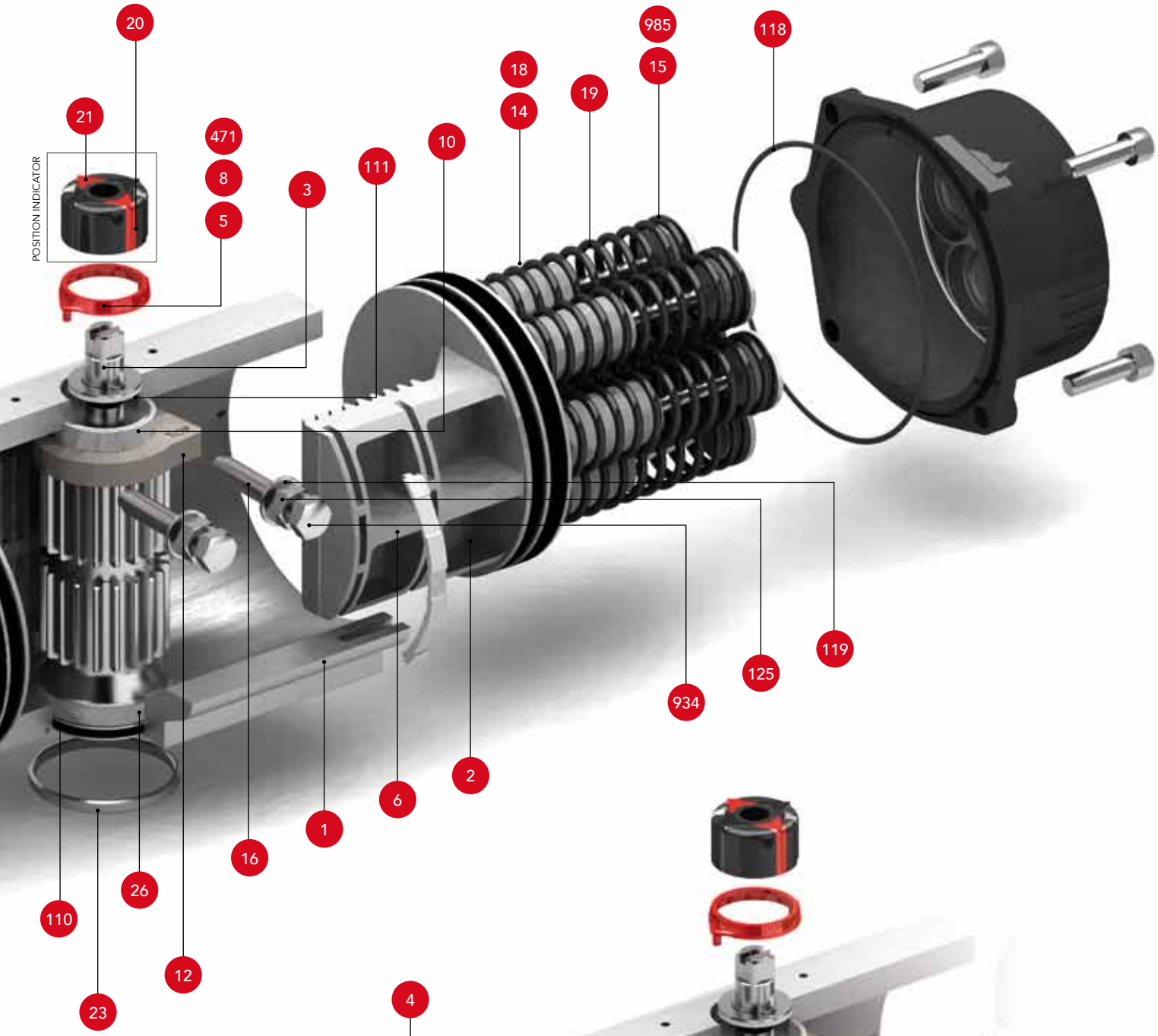

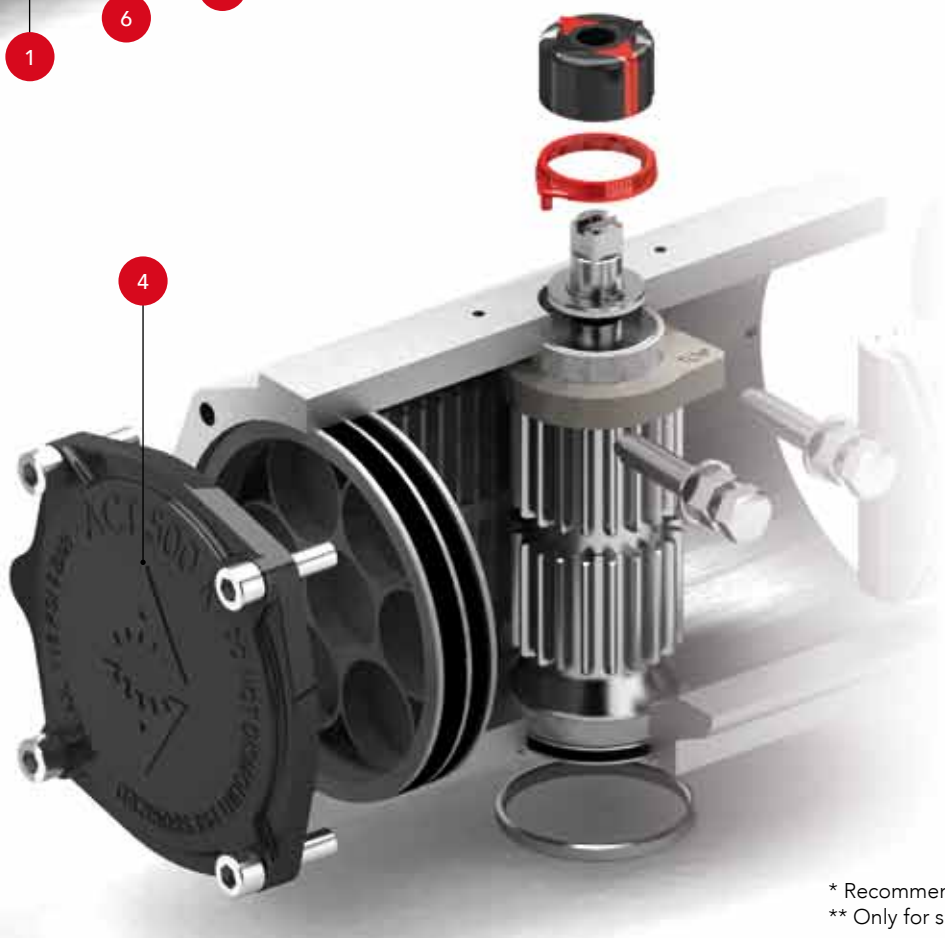

DOUBLE ACTING ACTUATOR (ADA)

* Recommended spare parts
** Only for sizes 2500 & 4000

GENERAL DIMENSIONS

SIZES 10 | 20 | 40 | 80 | 130 | 200 | 300 | 500 | 850

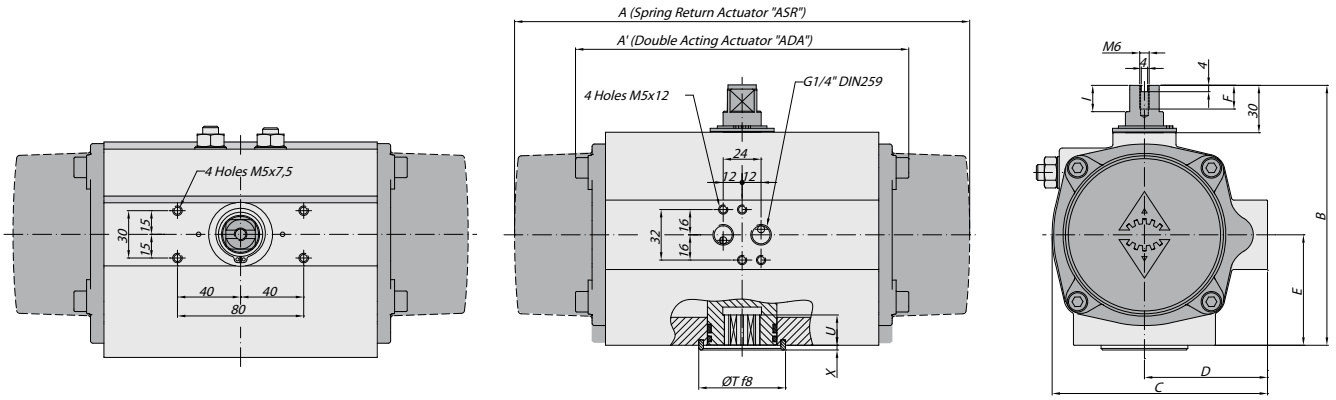

SIZES 1200 | 1750

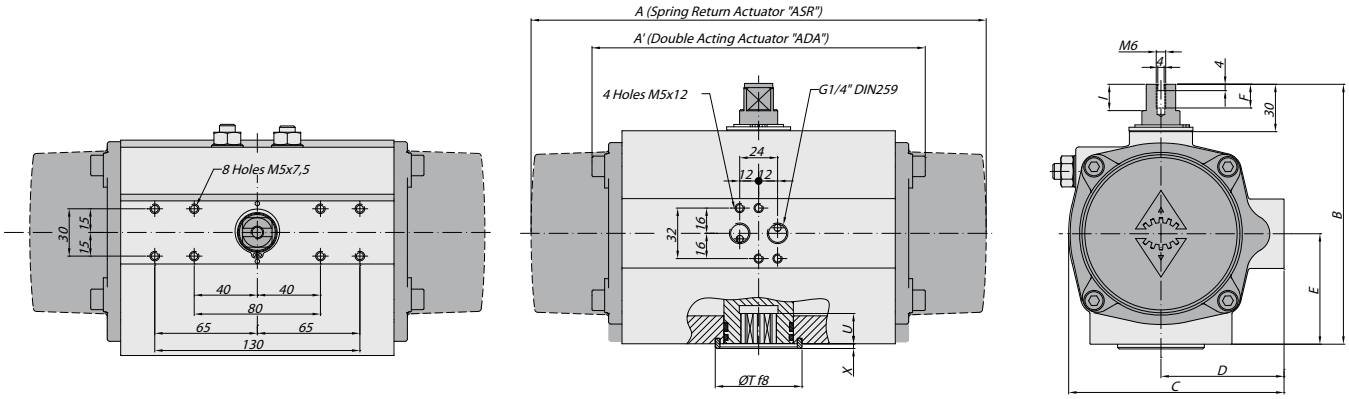

SIZES 2100

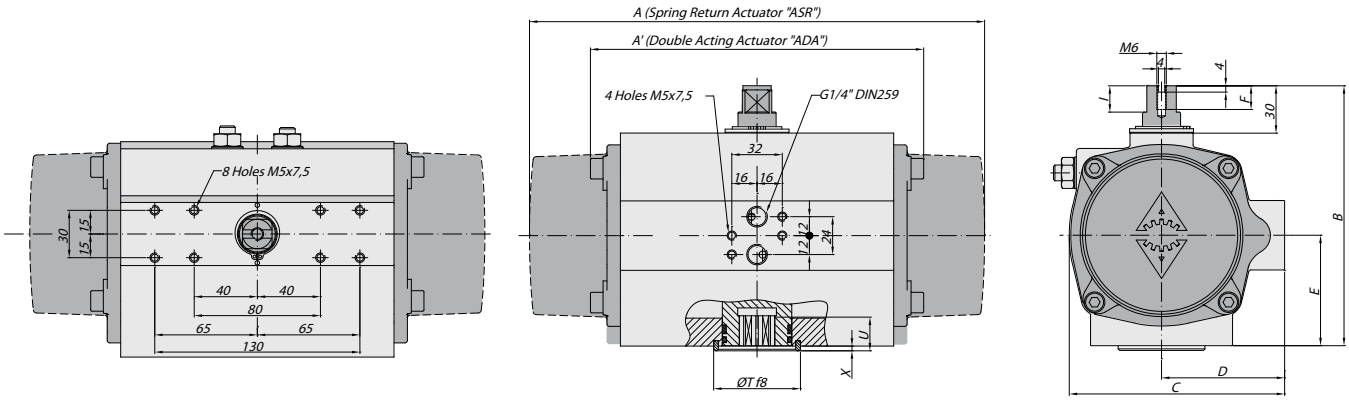

DOUBLE ACTING & SPRING RETURN ACTUATORS GENERAL DIMENSIONS in mm

SIZE	A	A'	B	C	D	E	F	I	R	øS	ISO 5211	øL	MxV	ISO 5211	øL1	M1xV1	øT	X	U
10	-	100	76	56	33	23	9	6	9	12.5	F03	36	M5x8	-	-	-	11	2	12
20	163	145	96	76	48	34	9	12.5	9	12.5	F03	36	M5x8	F05	50	M6x10	25	2	10
20	163	145	96	76	48	34	9	12.5	14	18.1	F05	50	M6x10	-	-	-	35	3	12
20	163	145	96	76	48	34	9	12.5	14	18.1	F04	42	M5x10	-	-	-	35	3	12
40	195	158	115	91	56	45	9	12.5	14	18.1	F04	42	M5x10	-	-	-	35	3	12
40	195	158	115	91	56	45	9	12.5	14	18.1	F05	50	M6x10	-	-	-	35	3	12
80	217	177	137	111	66	55	12	12.5	17	22.5	F05	50	M6x10	F07	70	M8x16	55	3	19
130	258	196	147	122	71	60	12	12.5	17	22.5	F05	50	M6x10	F07	70	M8x16	55	3	22
200	299	225	165	135.5	78	70	12	12.5	17	22.5	F07	70	M8x16	F10	102	M10x16	55	3	23

SIZES 2500

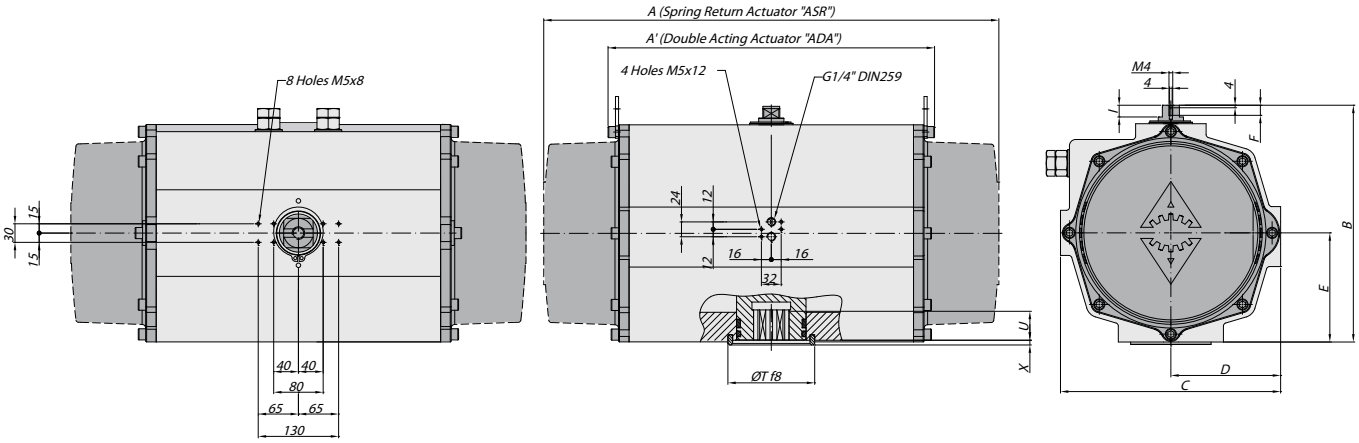

SIZES 4000

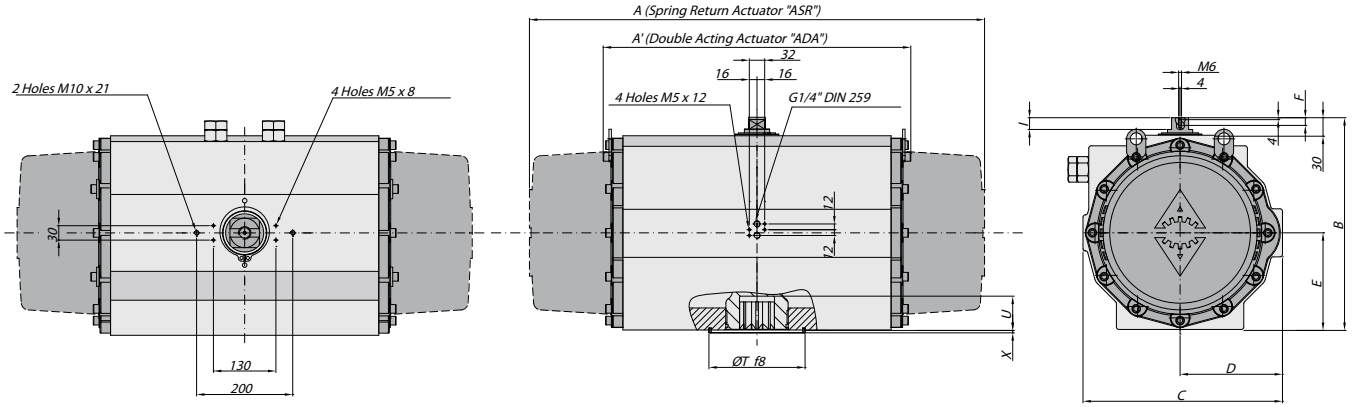

ISO 5211 DETAIL

SIZES
10 | 20 | 40 | 500 | 1750 | 2100 | 2500

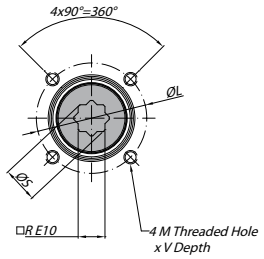

SIZES
20 | 80 | 130 | 200 | 300 | 850 | 1200

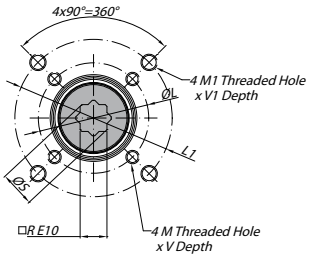

SIZES
4000

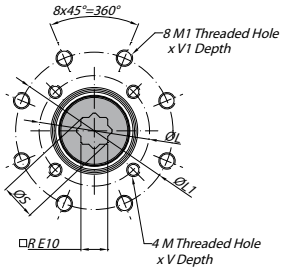

DOUBLE ACTING & SPRING RETURN ACTUATORS GENERAL DIMENSIONS in mm

SIZE	A	A'	B	C	D	E	F	I	R	øS	ISO 5211	øL	MxV	ISO 5211	øL1	M1xV1	øT	X	U
300	348.5	273	182	152.5	86	80	12	12.5	22	28.5	F07	70	M8x16	F10	102	M10x16	70	3	24
500	397	304	199	173	96	85	12	12.5	22	28.5	F10	102	M10x16	-	-	-	70	3	32
850	473	372	221	191.5	106	98	12	12.5	27	36.5	F10	102	M10x17	F12	125	M12x20	85	3	39
1200	560	439	249	212.5	116	114	16	18.6	36	48.5	F10	102	M10x17	F14	140	M16x26	100	4	48
1750	601	461	280	242.5	131	130	16	18.6	36	48.5	F14	140	M16x26	-	-	-	100	4	50
2100	702	510	313	276.5	148	147	16	18.6	46	60.1	F16	165	M20x29	-	-	-	130	4	50
2500	738	518	383	356	177.5	176.5	16	18.6	46	60.2	F16	165	M20x29	-	-	-	130	4	58
4000	940	630	434	415	213	201	16	18.6	55	72.5	F16	165	M20x30	F25	254	M16x30	200	4	60

DOUBLE ACTING ACTUATOR TORQUE OUTPUT in Nm

Size	Output torque for double acting in Nm																						Weight (kg)
	3 bar		3,5 bar		4 bar		4,5 bar		5 bar		5,5 bar		6 bar		6,5 bar		7 bar		8 bar		10 bar		
	0°	90°	0°	90°	0°	90°	0°	90°	0°	90°	0°	90°	0°	90°	0°	90°	0°	90°	0°	90°	0°	90°	
10	6		8		9		10		11		11.5		12		12		13		14		15		0.64
20	9.7		11.4		13		14.6		16.2		17.8		19.5		21.1		23		26		-		1.4
40	20.3		23.7		27.1		30.5		33.9		37.3		41		44		47		54		-		2.1
80	38.5		44.9		51.3		57.7		64.1		70.5		77		83		90		103		-		3
130	59.1		68.9		78.7		88.6		98.4		108.3		118		128		138		157		-		3.8
200	88		102		117		131		146		161		175		190		205		234		-		5.6
300	145		170		194		218		242		267		291		315		339		388		-		8.5
500	217		253		289		325		361		397		433		469		505		577		-		11.2
850	359		419		479		538		598		658		718		778		837		957		-		16.9
1200	519		606		692		779		865		952		1038		1125		1211		1384		-		25.8
1750	707		824		942		1060		1178		1295		1413		1531		1649		1884		-		32.5
2100	1086		1267		1448		1629		1810		1991		2172		2353		2534		2896		-		49.7
2500	1730		2019		2307		2596		2884		3172		3461		3749		4038		4614		-		69.6
4000	2408		2809		3210		3612		4013		4414		4816		5217		5618		6421		-		129.4

SPRING RETURN ACTUATOR TORQUE OUTPUT in Nm

Size	Type Pressure	Output torque for spring return in Nm																				Spring Stroke		Weight (kg)
		3 bar		3,5 bar		4 bar		4,5 bar		5 bar		5,5 bar		6 bar		6,5 bar		7 bar		8 bar		END	START	
		0°	90°	0°	90°	0°	90°	0°	90°	0°	90°	0°	90°	0°	90°	0°	90°	0°	90°	0°	90°	0°	90°	
20	S04			8	5	9	7	11	8	13	10	14	12	16	13	17	15	19	17	22	20	4	7	1.51
	S06 A									11	7	12	9	14	10	15	12	17	13	20	17	7	11	1.54
	S08											10	5	12	7	14	9	15	10	18	14	9	15	1.56
40	S04	16	14	20	17	23	20	26	24	30	27	33	30	37	34	40	37	43	41	50	47	5	8	2.17
	S06	14	10	18	14	21	17	24	20	28	24	31	27	34	30	38	34	41	37	48	44	7	12	2.20
	S08			15	10	19	14	22	17	26	20	29	24	32	27	36	30	39	34	46	41	10	16	2.23
	S10							20	14	24	17	27	20	30	24	34	27	37	30	44	37	12	20	2.26
	S12									21	13	25	17	28	20	32	24	35	27	42	34	15	24	2.29
	S14 A											23	13	26	17	30	20	33	24	40	30	17	28	2.32
80	S04	31	27	38	34	44	40	50	46	57	53	63	59	70	66	76	72	82	78	95	91	9	13	3.28
	S06	27	21	34	28	40	34	47	41	53	47	59	53	66	60	72	66	79	73	92	86	13	20	3.36
	S08					37	29	43	35	49	41	56	48	62	54	69	61	75	67	88	80	17	27	3.43
	S10							39	29	46	36	52	42	59	49	65	55	71	61	84	74	22	33	3.51
	S12									42	30	48	36	55	43	61	49	68	56	81	69	26	40	3.58
	S14 A											45	31	51	37	58	44	64	50	77	63	30	47	3.65
130	S06	43	36	52	46	62	56	72	65	82	75	92	85	102	95	111	105	121	115	141	134	19	27	4.40
	S08			47	38	57	48	67	58	76	68	86	77	96	87	106	97	116	107	135	127	26	36	4.50
	S10					51	40	61	50	71	60	81	70	91	80	100	89	110	99	130	119	32	45	4.60
	S12							56	42	65	52	75	62	85	72	95	82	105	92	124	111	39	54	4.70
	S14 A											70	54	80	64	89	74	99	84	119	103	45	64	4.80
200	S06	61	49	76	63	90	78	105	92	119	107	134	122	149	136	163	151	178	166	207	195	31	46	6.50
	S08			67	50	81	65	96	79	111	94	125	109	140	123	154	138	169	152	198	182	42	61	6.70
	S10					72	52	87	66	102	81	116	96	131	110	146	125	160	139	189	169	52	77	6.90
	S12							78	53	93	68	107	83	122	97	137	112	151	126	180	156	63	92	7.00
	S14 A											99	70	113	84	128	99	142	113	172	143	73	107	7.30
300	S06	102	75	126	99	151	123	175	148	199	172	223	196	247	220	272	245	296	269	344	317	51	83	9.65
	S08			112	76	136	100	160	124	185	148	209	173	233	197	257	221	281	245	330	294	68	111	9.92
	S10					122	76	146	101	170	125	194	149	219	173	243	198	267	222	315	270	85	138	10.20
	S12							131	77	156	101	180	126	204	150	228	174	253	198	301	247	102	166	10.50
	S14 A											165	102	190	126	214	151	238	175	287	223	119	193	10.80
500	S06	152	119	188	155	224	191	260	227	296	263	333	299	369	335	405	371	441	407	513	480	76	115	13.33
	S08	131	86	167	122	203	158	239	194	275	231	311	267	347	303	383	339	419	375	492	447	101	153	13.84
	S10					181	126	217	162	254	198	290	234	326	270	362	306	398	342	470	414	126	192	14.35
	S12							196	129	232	165	268	201	304	238	340	274	376	310	449	382	152	230	14.85
	S14 A											247	169	283	205	319	241	355	277	427	349	177	268	15.36
850	S06	260	209	320	269	380	328	440	388	500	448	559	508	619	568	679	627	739	687	858	807	116	177	19.7
	S08	227	159	287	218	347	278	407	338	467	398	526	458	586	518	646	577	706	637	826	757	155	236	20.3
	S10			254	168	314	228	374	288	434	348	494	408	553	467	613	527	673	587	793	707	193	295	20.9
	S12							341	238	401	298	461	358	521	417	580	477	640	537	760	657	232	353	21.6
	S14 A											428	307	488	367	547	427	607	487	727	607	271	412	22.2
1200	S06	373	289	460	376	546	462	633	549	720	635	806	722	893	808	979	895	1066	981	1239	1154	171	271	30.1
	S08	325	213	411	299	498	386	584	472	671	559	758	645	844	732	931	818	1017	905	1190	1078	229	361	31.1
	S10	276	136	363	222	449	309	536	395	622	482	709	569	795	655	882	742	969	828	1142	1001	286	451	32.2
	S12					401	232	487	319	574	405	660	492	747	578	833	665	920	751	1093	924	343	541	33.2
	S14 A									525	329	612	415	698	502	785	588	871	675	1044	848	400	631	34.3
1750	S06	477	349	595	466	712	584	830	702	948	820	1066	937	1183	1055	1301	1173	1419	1291	1654	1526	270	421	39.3
	S08	400	229	518	347	636	465	754	582	871	700	989	818	1107	936	1225	1053	1342	1171	1578	1407	360	562	41.0
	S10			441	228	559	345	677	463	795	581	912	699	1030	816	1148	934	1266	1052	1501	1287	451	702	42.7
	S12							600	344	718	461	836	579	954	697	1071	815	1189	933	1425	1168	541	843	44.4
	S14 A									642	342	759	460	877	578	995	695	1113	813	1348	1049	631	983	46.0
2100	S06	702	509	883	690	1064	871	1245	1052	1426	1233	1607	1414	1788	1595	1969	1776	2150	1957	2512	2319	384	577	60.3
	S08	574	316	755	497	936	678	1117	859	1298	1040	1479	1221	1660	1402	1841	1583	2022	1764	2384	2126	512	770	62.5
	S10			627	305	808	486	989	667	1170	848	1351	1029	1532	1210	1713	1391	1894	1572	2256	1934	640	962	64.2
	S12							861	474	1042	655	1223	836	1404	1017	1585	1198	1766	1379	2128	1741	768	1154	66.3
	S14 A									914	463	1095	644	1276	825	1457	1006	1638	1187	2000	1549	896	1347	68.0
2500	S06	1299	1045	1587	1333	1876	1622	2164	1910	2453	2199	2741	2487	3029	2775	3318	3064	3606	3352	4183	3929	508	806	85.9
	S08	1155	816	1444	1105	1732	1393	2020	1682	2309	1970	2597	2258	2886	2547	3174	2835	3462	3124	4039	3700	677	1075	89.4
	S10			1300	876	1588	1165	1877	1453	2165	1742	2453	2030	2742	2318	3030	2607	3319	2895	3895	3472	846	1344	92.9
	S12					1444	936	1733	1225	2021	1513	2310	1802	2598	2090	2886	2378	3175	2667	3752	3243	1015	1613	96.4
	S14 A							1589	996	1877	1285	2166	1573	2454	1861	2742	2150	3031	2438	3608	3015	1184	1882	99.9
4000	S06	1763	1262	2165	1663	2566	2065	2967	2466	3369	2867	3770	3269									758	1348	158.7
	S08	1549	880	1950	1282	2351	1683	2752	2084	3154	2485	3555	2887	3956	3288	4358	3689	4759	4091	5068	4399	1011	1797	164.7
	S10					2136	1301	2538	1702	2939	2104	3340	2505	3742	2906	4143	3307	4544	3709	4853	4017	1264	2246	170.8
	S12							2323	1320	2724	1722	3125	2123	3527	2524	3928	2926	4329	3327	4638	3636	1516	2696	176.9
	S14 A											2911	1741	3312	2142	3713	2544	4115	2945	4423	3254	1769	3145	182.9

Note: A=Standard

DOUBLE ACTING ACTUATOR TORQUE OUTPUT in ft lb

Size	Output torque for double acting in ft lb																						Weight (lb)
	43.5 psi		50.8 psi		58 psi		65.3 psi		72.5 psi		80 psi		87 psi		94.3 psi		102 psi		116 psi		145 psi		
	0°	90°	0°	90°	0°	90°	0°	90°	0°	90°	0°	90°	0°	90°	0°	90°	0°	90°	0°	90°	0°	90°	
10	4.4		6		6.5		7.4		8		8.5		9		9		9.5		10.3		12		1.4
20	7.2		8.4		9.6		10.8		11.9		13.1		14.4		15.6		17		19.2		-		3.1
40	15.0		17.5		20.0		22.5		25.0		27.5		30.2		32.4		34.6		39.8		-		4.6
80	28.4		33.1		37.8		42.5		47.2		52.0		56.7		61.2		66		76		-		6.6
130	43.6		50.8		58.0		65.3		72.5		79.8		87		94		102		116		-		8.4
200	64.9		75.2		86.2		96.5		108		119		129		140		151		172		-		12.3
300	107		125.3		143		161		178		197		214		232		250		286		-		18.7
500	160		186		213		240		266		293		319		346		372		425		-		24.7
850	265		309		353		397		441		485		529		573		617		705		-		37.3
1200	383		447		510		574		638		702		765		829		893		1020		-		56.9
1750	521		607		694		781		868		954		1041		1128		1215		1389		-		71.6
2100	801		934		1068		1201		1335		1468		1602		1735		1869		2136		-		109.5
2500	1275		1488		1700		1913		2126		2338		2551		2763		2976		3401		-		153.4
4000	1775		2070		2366		2662		2958		3253		3549		3845		4140		4732		-		285.3

SPRING RETURN ACTUATOR TORQUE OUTPUT in lb

Size	Type Pressure	Output torque for spring acting in ft lb																				Spring Stroke		Weight (lb)
		43.5 psi		50.8 psi		58 psi		65.3 psi		72.5 psi		80 psi		87 psi		94.3 psi		102 psi		116 psi		END	START	
		0°	90°	0°	90°	0°	90°	0°	90°	0°	90°	0°	90°	0°	90°	0°	90°	0°	90°	0°	90°	0°	90°	
20	S04			6	4	7	5	8	6	9	7	10	9	12	10	13	11	14	12	16	15	3	5	3.33
	S06 A									8	5	9	6	10	8	11	9	13	10	15	12	5	8	3.40
	S08											8	4	9	5	10	6	11	8	14	10	7	11	3.44
40	S04	12	10	14	12	17	15	19	17	22	20	24	22	27	25	29	27	32	30	37	35	4	6	4.78
	S06	10	7	13	10	15	12	18	15	21	18	23	20	25	22	28	25	30	27	35	32	5	9	4.85
	S08			11	7	14	10	16	12	19	15	21	18	24	20	27	22	29	25	34	30	7	12	4.92
	S10							15	10	18	13	20	15	22	18	25	20	27	22	32	27	9	15	4.98
	S12									15	10	18	13	21	15	24	18	26	20	31	25	11	18	5.05
	S14 A											17	10	19	13	22	15	24	18	29	22	13	21	5.11
80	S04	23	20	28	25	32	29	37	34	42	39	46	43	52	49	56	53	60	57	70	67	6	10	7.23
	S06	20	16	25	21	30	25	35	30	39	35	43	39	49	44	53	49	58	54	68	63	10	15	7.41
	S08					27	21	32	26	36	30	41	35	46	40	51	45	55	49	65	59	13	20	7.56
	S10							29	21	34	27	38	31	43	36	48	41	52	45	62	55	16	25	7.74
	S12									31	22	35	27	41	32	45	36	50	41	60	51	19	29	7.89
	S14 A											33	23	38	27	43	32	47	37	57	46	22	34	8.05
130	S06	31	26	39	34	46	41	53	48	60	55	68	63	75	70	82	77	89	85	104	99	14	20	9.70
	S08			35	28	42	35	49	43	56	50	63	57	71	64	78	71	85	79	99	94	19	27	9.92
	S10					38	29	45	37	52	44	60	52	67	59	74	66	81	73	96	88	24	33	10.14
	S12							41	31	48	38	55	46	63	53	70	60	77	68	91	82	29	40	10.36
	S14 A											52	40	59	47	66	55	73	62	88	76	33	47	10.58
200	S06	45	36	56	46	66	57	77	68	88	79	99	90	110	100	120	111	131	122	153	144	23	34	14.33
	S08			49	37	60	48	71	58	82	69	92	80	103	91	113	102	125	112	146	134	31	45	14.77
	S10					53	38	64	49	75	60	85	71	97	81	108	92	118	102	139	125	38	56	15.21
	S12							57	39	69	50	79	61	90	71	101	83	111	93	133	115	46	68	15.43
	S14 A											73	52	83	62	94	73	105	83	127	105	54	79	16.09
300	S06	75	55	93	73	111	91	129	109	147	127	164	144	182	162	200	181	218	198	254	234	38	61	21.27
	S08			83	56	100	74	118	91	136	109	154	128	172	145	189	163	207	181	243	217	50	81	21.87
	S10					90	56	108	74	125	92	143	110	161	128	179	146	197	164	232	199	63	102	22.49
	S12							97	57	115	74	133	93	150	111	168	128	186	146	222	182	75	122	23.15
	S14 A											122	75	140	93	158	111	175	129	212	164	88	143	23.81
500	S06	112	88	139	114	165	141	192	167	218	194	245	220	272	247	298	273	325	300	378	354	56	85	29.39
	S08	97	63	123	90	150	116	176	143	203	170	229	197	256	223	282	250	309	276	363	329	74	113	30.51
	S10					133	93	160	119	187	146	214	172	240	199	267	226	293	252	346	305	93	141	31.64
	S12							144	95	171	122	198	148	224	175	251	202	277	228	331	282	112	170	32.74
	S14 A											182	125	209	151	235	178	262	204	315	257	130	198	33.86
850	S06	192	154	236	198	280	242	324	286	369	330	412	374	456	419	500	462	545	506	632	595	85	130	43.43
	S08	167	117	212	161	256	205	300	249	344	293	388	338	432	382	476	425	520	469	609	558	114	174	44.75
	S10			187	124	231	168	276	212	320	256	364	301	408	344	452	388	496	433	584	521	143	217	46.08
	S12							251	175	296	220	340	264	384	307	427	352	472	396	560	484	171	260	47.62
	S14 A											315	226	360	270	403	315	447	359	536	447	200	304	48.94
1200	S06	275	213	339	277	402	340	467	405	531	468	594	532	658	595	722	660	786	723	913	850	126	199	66.36
	S08	240	157	303	220	367	284	430	348	495	412	559	475	622	539	686	603	750	667	877	794	168	266	68.56
	S10	203	100	268	164	331	228	395	291	458	355	523	419	586	483	650	547	714	610	842	738	210	332	70.99
	S12					296	171	359	235	423	298	486	363	551	426	614	490	678	553	806	681	253	399	73.19
	S14 A									387	242	451	306	514	370	579	433	642	497	769	625	295	465	75.62
1750	S06	352	257	439	343	525	430	612	517	699	604	786	691	872	778	959	865	1046	951	1219	1125	199	310	86.64
	S08	295	169	382	256	469	343	556	429	642	516	729	603	816	690	903	776	989	863	1163	1037	265	414	90.39
	S10			325	168	412	254	499	341	586	428	672	515	759	601	846	688	933	775	1106	949	332	517	94.14
	S12							442	254	529	340	616	427	703	514	789	601	876	688	1050	861	399	621	97.88
	S14 A									473	252	559	339	646	426	733	512	820	599	993	773	465	724	101.41
2100	S06	518	375	651	509	785	642	918	776	1052	909	1185	1043	1319	1176	1452	1310	1586	1443	1853	1710	283	426	132.28
	S08	423	233	557	367	690	500	824	634	957	767	1091	901	1224	1034	1358	1168	1491	1301	1758	1568	378	568	136.69
	S10			462	225	596	358	729	492	863	625	996	759	1130	892	1263	1026	1397	1159	1664	1426	472	710	141.09
	S12							635	350	768	483	902	617	1035	750	1169	884	1302	1017	1569	1284	566	851	145.50
	S14 A									674	341	808	475	941	608	1074	742	1208	875	1475	1142	661	993	149.91
2500	S06	957	770	1170	982	1383	1195	1595	1408	1808	1621	2020	1833	2232	2045	2445	2258	2658	2470	3083	2896	374	594	189.38
	S08	851	601	1064	814	1276	1027	1489	1240	1702	1452	1914	1664	2127	1877	2339	2089	2551	2302	2977	2727	499	792	197.09
	S10			958	646	1170	859	1383	1071	1596	1284	1808	1496	2021	1708	2233	1921	2446	2134	2871	2559	624	991	204.81
	S12					1064	690	1277	903	1489	1115	1702	1328	1915	1540	2127	1753	2340	1966	2765	2390	748	1189	212.52
	S14 A							1171	734	1383	947	1596	1159	1809	1372	2021	1585	2234	1797	2659	2222	873	1387	220.24
4000	S06	1299	930	1596	1226	1891	1522	2187	1817	2483	2113	2778	2409									559	993	349.87
	S08	1142	649	1437	945	1733	1240	2028	1536	2324	1831	2620	2128	2916	2423	3212	2719	3507	3015	3735	3242	745	1324	363.10
	S10					1574	959	1871	1254	2166	1551	2462	1846	2758	2142	3053	2437	3349	2734	3577	2961	932	1655	376.55
	S12							1712	973	2008	1269	2303	1565	2599	1860	2895	2156	3190	2452	3418	2680	1117	1987	389.99
	S14 A											2145	1283	2441	1579	2736	1875	3033	2170	3260	2398	1304	2318	403.22

Note: A=Standard